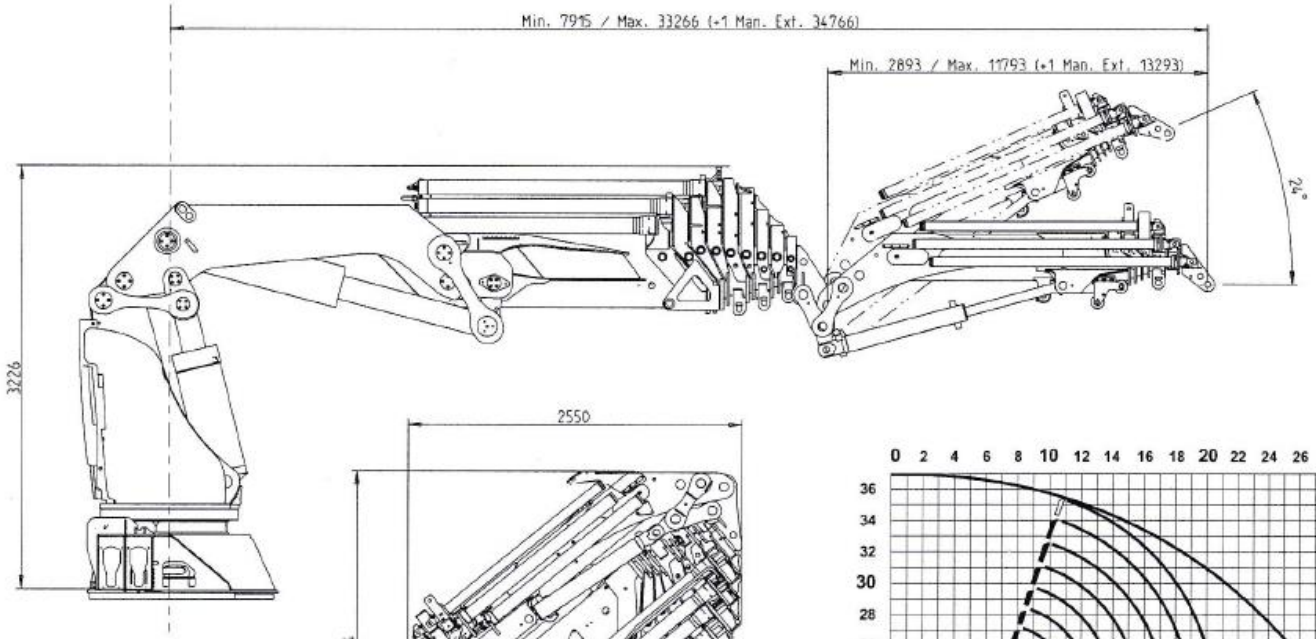
Min. 7915 / Max. 33266 (+1 Man. Ext. 34766)
Min. 2893 / Max. 11793 (+1 Man. Ext. 13293)
24°
3226

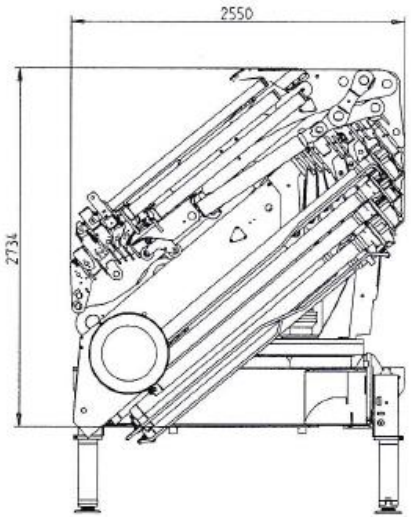
2550
2734

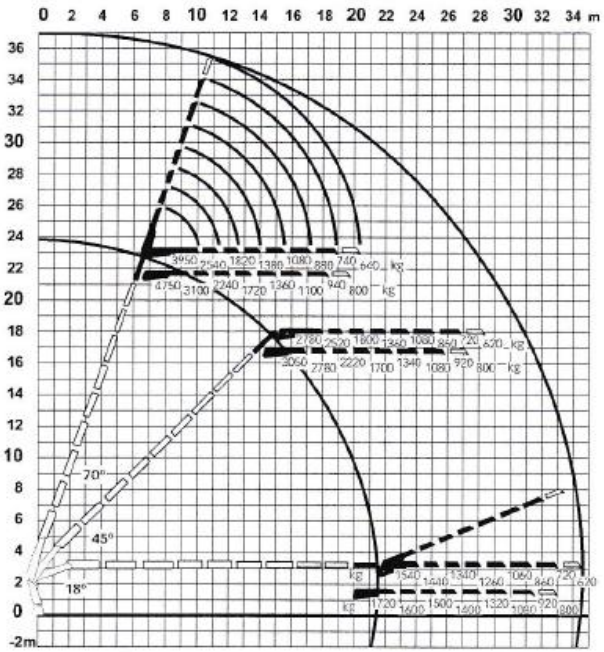
0 2 4 6 8 10 12 14 16 18 20 22 24 26 28 30 32 34 m
36 34 32 30 28 26 24 22 20 18 16 14 12 10 8 6 4 2 0 -2m
70°
45°
18°

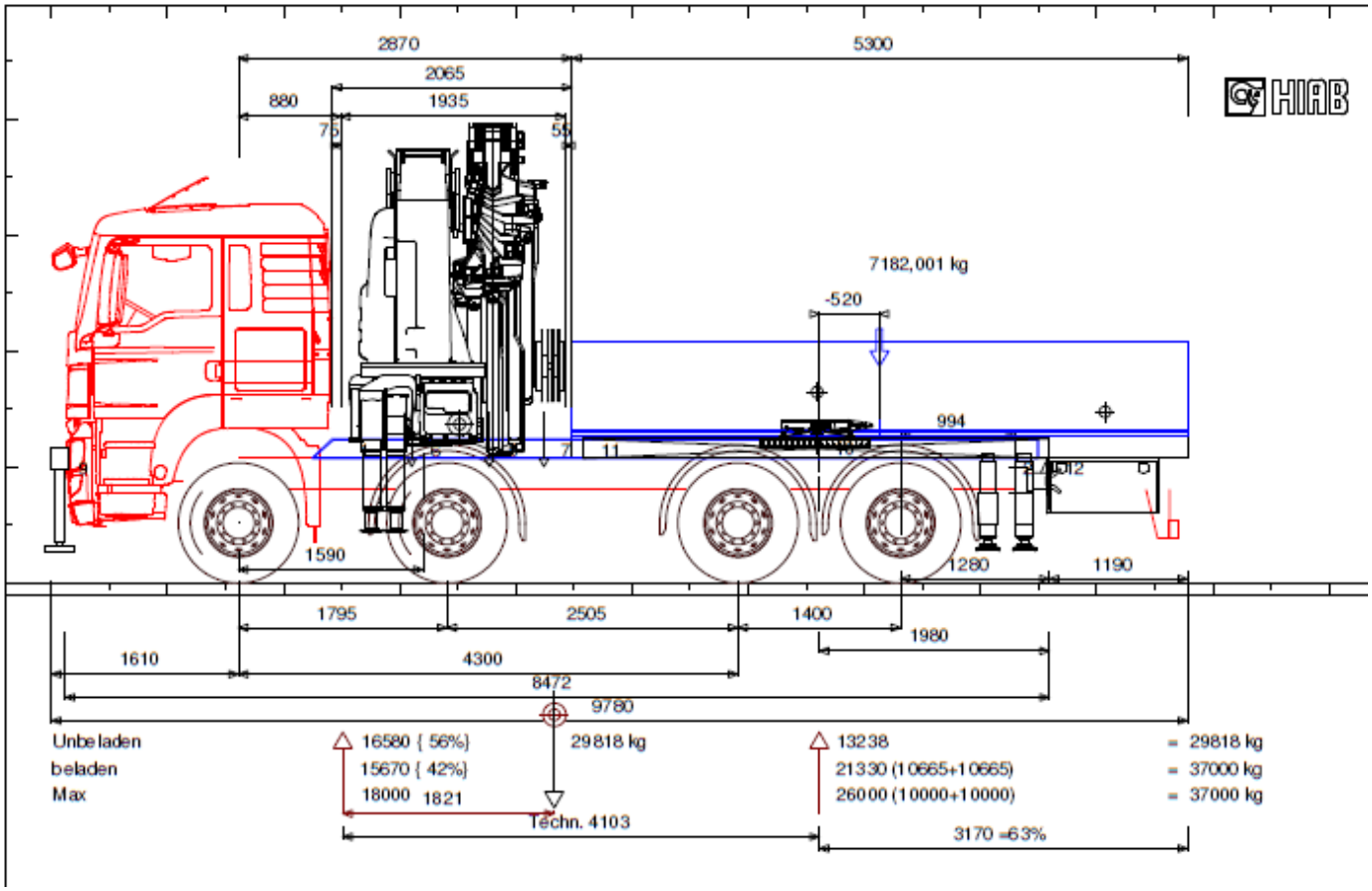
2870
5300
2065
880
1935
75
55
HIAB
7182,001 kg
-520
994
1590
1280
1190
1795
2505
1400
1980
1610
4300
8472
9780
Unbeladen
beladen
Max
16580 { 56%}
15670 { 42%}
18000 1821
29818 kg
Techn. 4103
13238
21330 (10665+10665)
26000 (10000+10000)
3170 =63%
= 29818 kg
= 37000 kg
= 37000 kg